RT-FA0G13-C00

100Gb/s QSFP28 PSM4 2km Optical Transceiver

Product Features

- Four-channel full-duplex transceiver modules
- Transmission data rate up to 26Gbit/s per channel
- Up to 2km transmission of single mode fiber
- Low power consumption <3.5W
- Operating case temperature 0℃ to 70℃
- 3.3V power supply voltage
- RoHS 6 compliant
- Hot Pluggable QSFP28 form factor
- Single MPO connector receptacle
- Built-in digital diagnostic function

Applications

- 100G Ethernet
- Proprietary High Speed Interconnections
- Data center

The Rayoptek RT-FA0G13-C00 is a Four-Channel, Pluggable, Parallel, Fiber-Optic QSFP28 Transceiver for 100G Ethernet Applications. The QSFP28 full-duplex optical module offers 4 independent transmit and receive channels, each capable of 26Gbps operation for an aggregate data rate of 104Gbps 2km using single mode fiber. These modules are designed to operate over single mode fiber systems using DFB laser array. An optical fiber ribbon cable with an MPO/MTPTM connector can be plugged into the QSFP28 module receptacle. QSFP28 PSM4 is one kind of parallel transceiver which provides increased port density and total system cost savings.

Ordering Information

Part Number	Description
RT-FA0G13-C00	4X25.78125G QSFP28 PSM4, MPO connector, 2km over single mode fiber

For More Information:

Wuhan RayOptek Co.,Ltd

Address: G3-201,NewEnergy Building,No.999 Gao Xin Road, Wuhan, Hubei, China

Phone: 0086-27-87106345 Fax: 0086-27-87106345 Email: sales@rayoptek.com

Regulatory Compliance

Feature	Standard	Performance
Electromagnetic Interference (EMI)	FCC Part 15 Class B EN 55022:2010, Class B	Compatible with standards
Electromagnetic susceptibility (EMS)	EN 55024:2010	Compatible with standards
Laser Eye Safety	FDA 21CFR 1040.10 and 1040.11 EN60950, EN (IEC) 60825-1,2	Compatible with Class I laser product

Absolute Maximum Ratings

The operation in excess of any absolute maximum ratings might cause permanent damage to this module.

Parameter	Symbol	Min	Max	Unit	Notes
Storage Temperature	TS	-40	85	degC	
Operating Case Temperature	TOP	0	70	degC	
Power Supply Voltage	VCC	-0.3	3.6	V	
Relative Humidity (non-condensation)	RH	0	85	%	
Input Voltage	Vin	-0.3	Vcc+0.3	V	

Recommended Operating Conditions and Power Supply Requirements

Parameter	Symbol	Min	Typical	Max	Unit	Notes
Operating Case Temperature	TOP	0		70	degC	Operating Case Temperature
Power Supply Voltage	VCC	3.135	3.3	3.465	V	Power Supply Voltage
Power Consumption		-		3.5	W	Power Consumption
Data Rate	DR		25.78125		Gbps	Data Rate
Data Speed Tolerance	ΔDR	-100		+100	ppm	Data Speed Tolerance
Link Distance with G.652	D	0		2	km	Link Distance with G.652

Electrical Characteristics

Parameter	Test Point	Min	Typical	Max	Unit	Notes
Differential input impedance	Zin	90	100	110	ohm	
Differential Output impedance	Zout	90	100	110	ohm	
Differential input voltage amplitude	ΔVin	300		1100	mVp-p	
Differential output voltage amplitude	ΔVout	300		800	mVp-p	
Input Logic Level High	VIH	2.0		VCC	V	
Input Logic Level Low	VIL	0		0.8	V	
Output Logic Level High	VOH	VCC-0.5		VCC	V	
Output Logic Level Low	VOL	0		0.4	V	

Optical Characteristics

Parameter	Symbol	Min	Typical	Max	Unit	Notes
Transmitter						
Center Wavelength	λC	1295		1325	nm	1
RMS Spectral Width	λrms	-		3.5	nm	1
Average Launch Power, each lane	PAVG	-6	-0.5	+2.0	dBm	
Optical Modulation Amplitude (OMA)	POMA	-5	-0.5	+2.2	dBm	1
Difference in Launch Power between any two lanes	Ptx,diff			5.0	dB	
Transmitter and dispersion penalty (TDP), each lane (max)	TDP			2.9	dBm	1
Rise/Fall Time	Tr/Tf			30	ps	
Extinction Ratio	ER	3.5			dB	
Relative Intensity Noise	Rin			-128	dB/Hz	

Optical Return Loss Tolerance	TOL			20	dB	
Transmitter Reflectance	RT			-12	dB	
Transmitter Eye Mask Margin	EMM	10			%	2
Average Launch Power OFF Transmitter, each Lane	Poff			-30	dBm	
Transmitter Eye Mask Definition {X1, X2, X3, Y1, Y2, Y3}		{0.31,0.4,0.45, 0.34,0.38,0.4}				
Receiver						
Center Wavelength	λC	1295		1325	nm	
Damage Threshold	THd	+3			dBm	
Overload, each lane	OVL	+2.5			dBm	
Receiver Sensitivity in OMA, each Lane	SEN			-11.35	dBm	3
Signal Loss Assert Threshold	LOSA	-30			dBm	
Signal Loss Deassert Threshold	LOSD			-12	dBm	
LOS Hysteresis	LOSH	0.5			dB	
Optical Return Loss	ORL			-12	dBm	

Notes:

1. Transmitter wavelength, RMS spectral width and power need to meet the OMA minus TDP specs to guarantee link performance.
2. The eye diagram is tested with 1000 waveform.
3. Measured with a PRBS 2^{31} -1 test pattern, @25.78Gb/s, BER<$5*10^{-5}$

Digital Diagnostic Functions

The following digital diagnostic characteristics are defined over the normal operating conditions unless otherwise specified.

Parameter	Symbol	Min	Max	Unit	Notes
Temperature monitor absolute error	DMI_Temp	-3	3	degC	Over operating temp
Supply voltage monitor absolute error	DMI _VCC	-0.1	0.1	V	Full operating range
Channel RX power monitor absolute error	DMI_RX	-3	3	dB	Per channel
Channel Bias current monitor	DMI_Ibias	-10%	10%	mA	Per channel
Temperature monitor absolute error	DMI_Temp	-3	3	degC	Over operating temp

Power Supply Filtering

The host board should use the power supply filtering shown in Figure1.

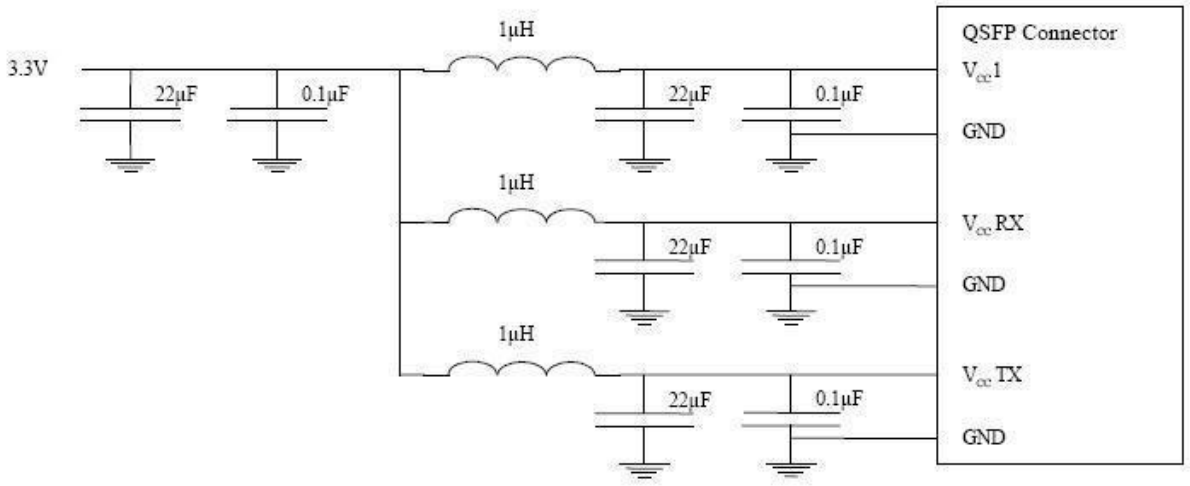

Figure1. Host Board Power Supply Filtering

Optical Interface Lanes and Assignment

The optical interface port is a male MPO connector. The four fiber positions on the left as shown in Figure 2, with the key up, are used for the optical transmit signals (Channel 1 through4). The fiber positions on the right are used for the optical receive signals (Channel 4 through 1). The central four fibers are physically present.

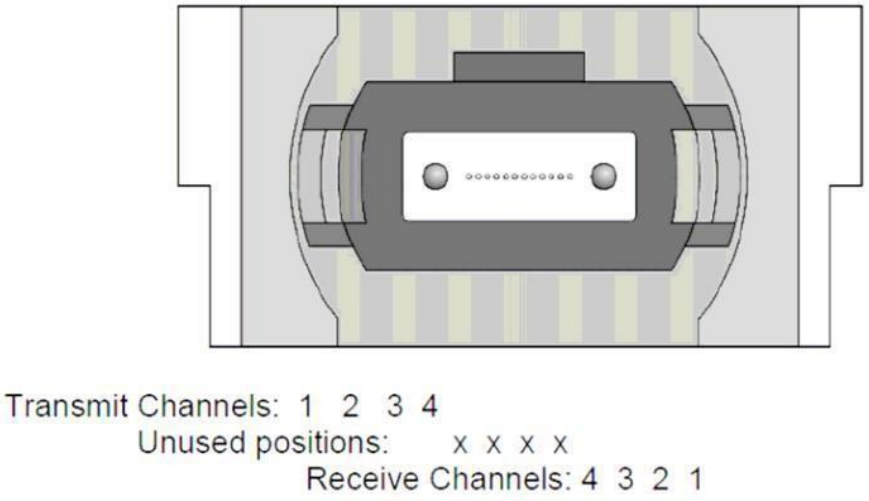

Figure 2. Optical Receptacle and Channel Orientation

Mechanical Dimensions

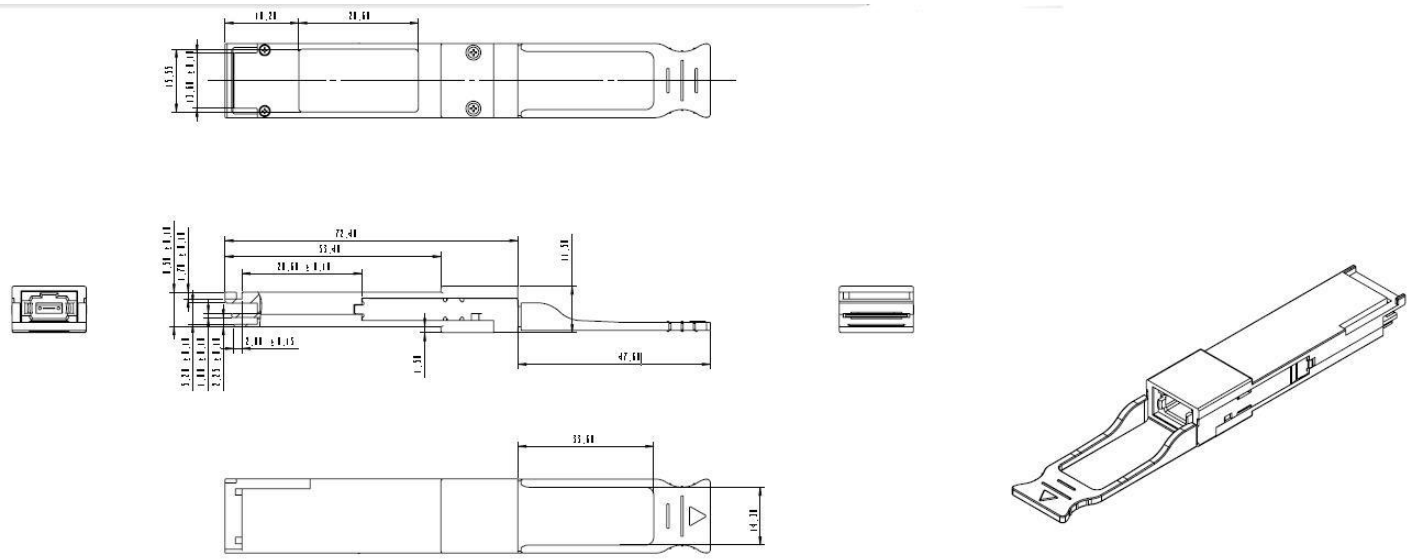

Attention: To minimize MPO connection induced reflections, an MPO receptacle with 8-degree angled end-face is utilized for this product. A male MPO connector with 8-degree end-face should be used with this product as illustrated in Figure 5.

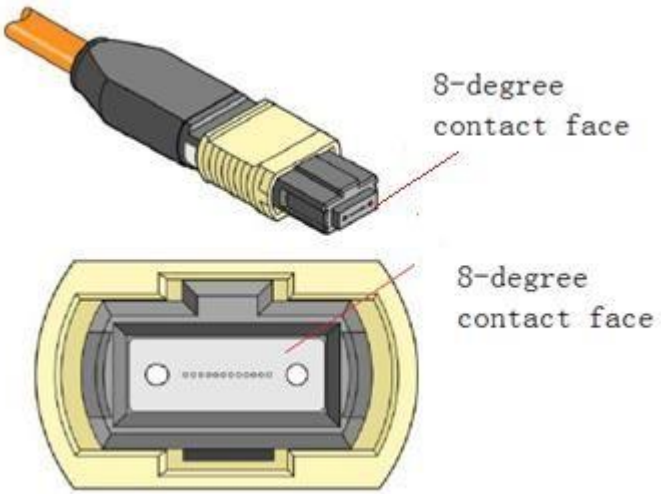

ESD

This transceiver is specified as ESD threshold 1kV for SFI pins and 2kV for all other electrical input pins, tested per MIL-STD-883, Method 3015.4 /JESD22-A114-A (HBM). However, normal ESD precautions are still required during the handling of this module. This transceiver is shipped in ESD protective packaging. It should be removed from the packaging and handled only in an ESD protected environment.

Laser Safety

This is a Class 1 Laser Product according to IEC 60825-1:2007. This product complies with 21 CFR 1040.10 and 1040.11 except for deviations pursuant to Laser Notice No. 50, dated (June 24, 2007).

Pin Assignment and Description

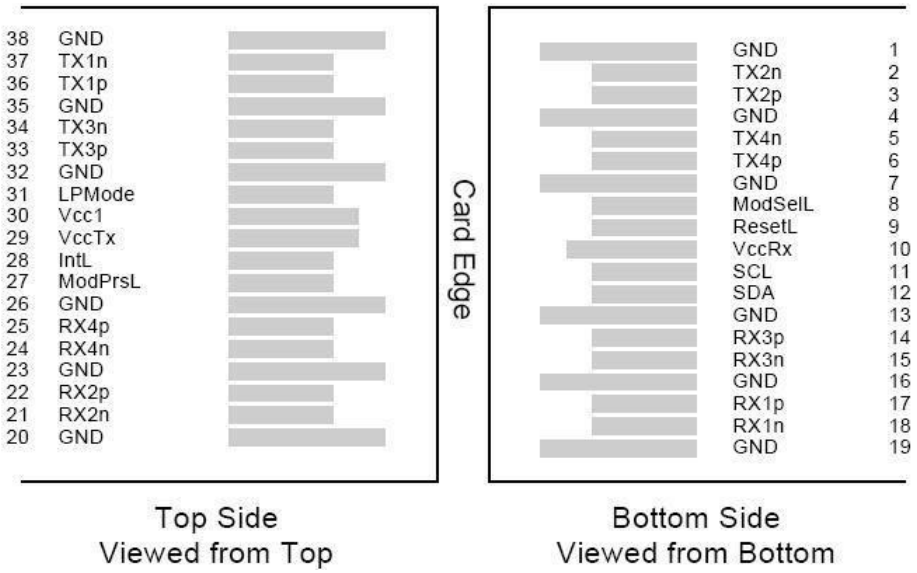

Pin Assignment

PIN #	Logic	Symbol	Description	Notes
1		GND	Ground	
2	CML-I	Tx2n	Transmitter Inverted Data Input	
3	CML-I	Tx2p	Transmitter Non-Inverted Data output	
4		GND	Ground	
5	CML-I	Tx4n	Transmitter Inverted Data Input	
6	CML-I	Tx4p	Transmitter Non-Inverted Data output	
7		GND	Ground	
8	LVTLL-I	ModSelL	Module Select	
9	LVTLL-I	ResetL	Module Reset	
10		VccRx	+3.3V Power Supply Receiver	
11	LVCMOS-I/O	SCL	2-Wire Serial Interface Clock	
12	LVCMOS-I/O	SDA	2-Wire Serial Interface Data	
13		GND	Ground	
14	CML-O	Rx3p	Receiver Non-Inverted Data Output	
15	CML-O	Rx3n	Receiver Inverted Data Output	
16		GND	Ground	
17	CML-O	Rx1p	Receiver Non-Inverted Data Output	
18	CML-O	Rx1n	Receiver Inverted Data Output	
19		GND	Ground	
20		GND	Ground	
21	CML-O	Rx2n	Receiver Inverted Data Output	
22	CML-O	Rx2p	Receiver Non-Inverted Data Output	
23		GND	Ground	

24	CML-O	Rx4n	Receiver Inverted Data Output	
25	CML-O	Rx4p	Receiver Non-Inverted Data Output	
26		GND	Ground	
27	LVTTL-O	ModPrsL	Module Present	
28	LVTTL-O	IntL	Interrupt	
29		VccTx	+3.3 V Power Supply transmitter	
30		Vcc1	+3.3 V Power Supply	
31	LVTTL-I	LPMode	Low Power Mode	
32		GND	Ground	
33	CML-I	Tx3p	Transmitter Non-Inverted Data Input	
34	CML-I	Tx3n	Transmitter Inverted Data Output	
35		GND	Ground	
36	CML-I	Tx1p	Transmitter Non-Inverted Data Input	
37	CML-I	Tx1n	Transmitter Inverted Data Output	
38		GND	Ground	

Wuhan RayOptek CO.,Ltd

Headquarter

Address:G3-201, New Energy Building, No.999 Gao Xin Road, Wuhan, Hubei, China

Tel:+86-27-87106345

Email:sales@rayoptek.com